USB HID retrofit for SNES/NES/DB-9 style game controllers

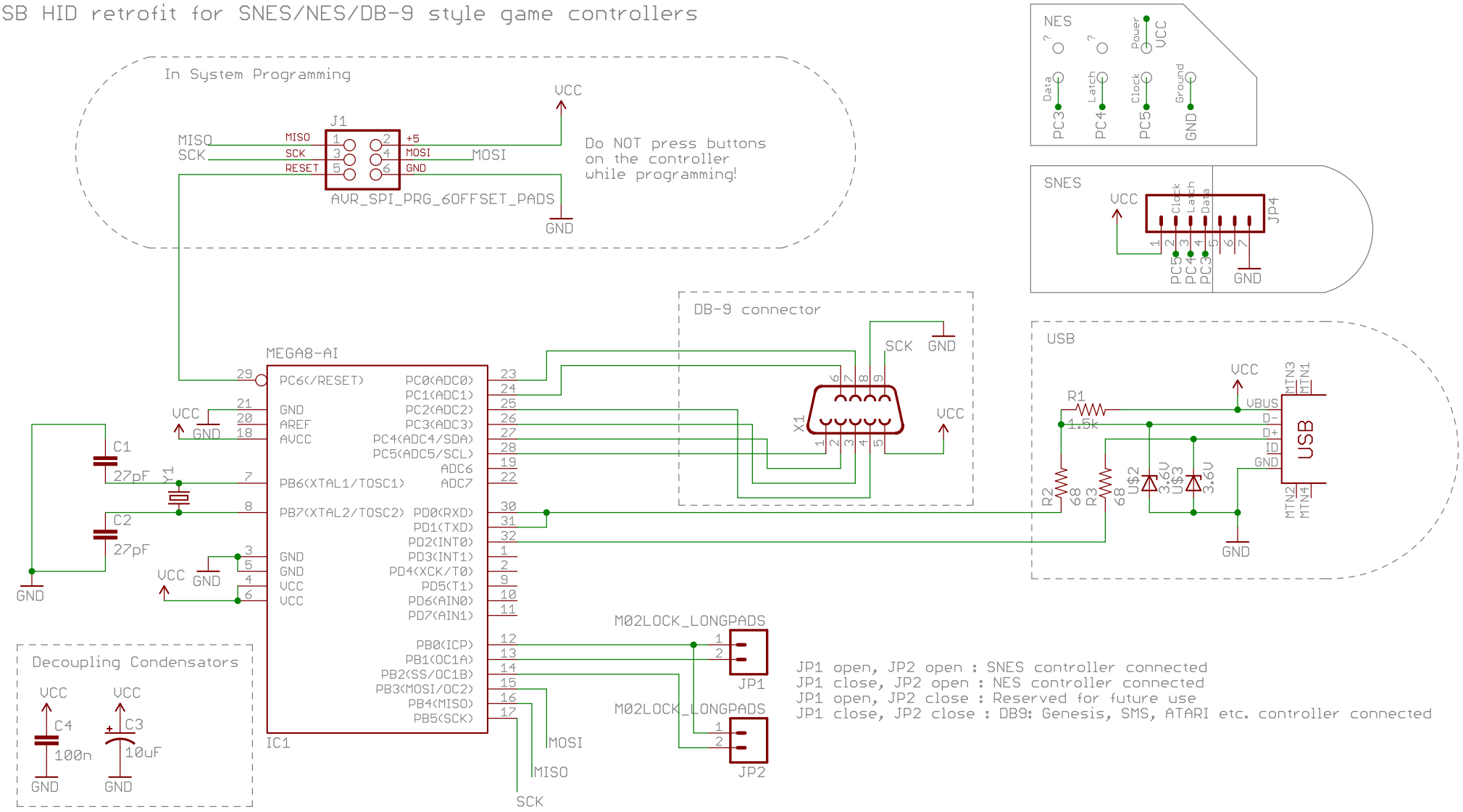

Released under the Creative Commons Attribution Share-Alike 3.0 License
http://creativecommons.org/licenses/by-sa/3.0
Design by: Stahl

http://wiki.sgmk-ssam.ch/index.php?title=Atari_Amiga_C64_SNES_NES_to_USB_Adapter
Based on http://www.raphnet.net/electronique/atari_usb/

open hardware

TITLE: nes_snes_db9_usb-1.9	
Document Number:	REV:
Date: 07.10.14 22:43	Sheet: 1/1