lifepatch Baby v0.4 - Jan 2013

Attiny85 proto experimental programming PCB, with direct USB port,
modified from anyma's BabyGnusbuino

v0.4: added ground pad for Vext
v0.3:

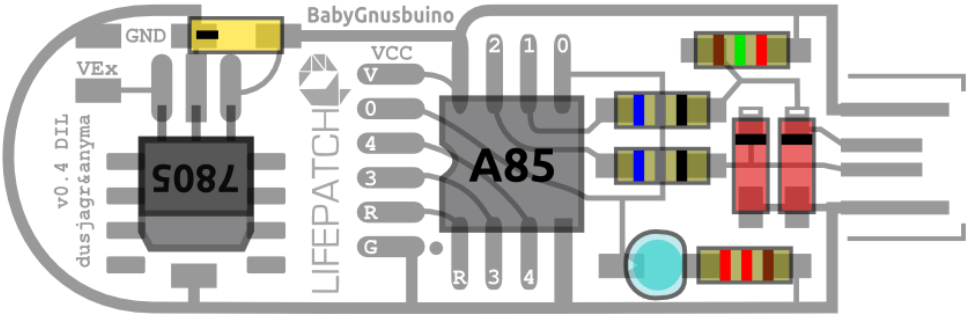

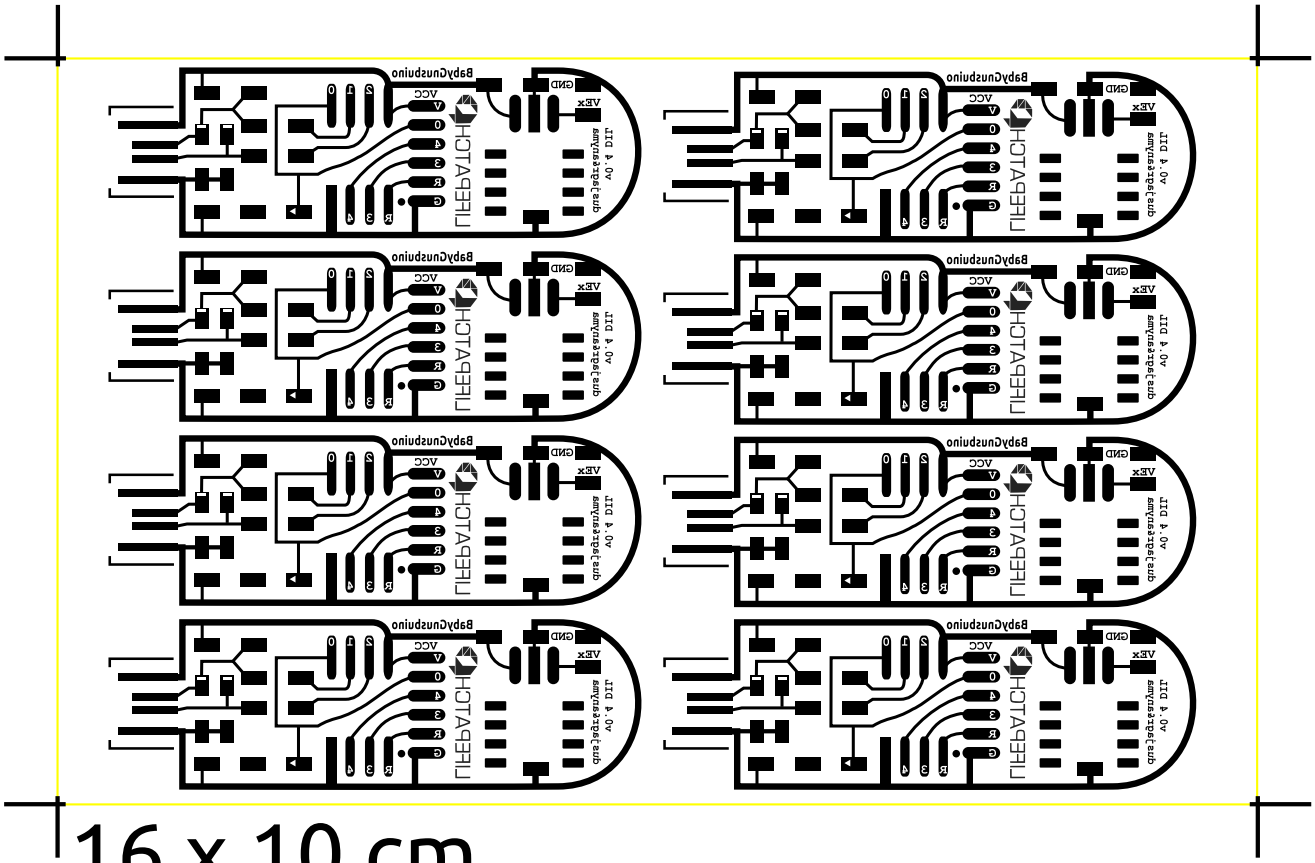

16 x 10 cm

Design by dusjagr, 2013
more info on: http://wiki.sgmk-ssam.ch/index.php/Babygnusbuino

Parts list:
1 x Atmel Attiny85 microprocessor
2 x resistors 68 Ohms
2 x zeners 3.3V
1 x resistor 1k6
1 x capacitor 100n

Optional:
1 x 7805 Voltage regulator
1 x LED
1 x resistor 220 Ohm