hvsp fuse resetter

original schema and code etc. can be found at http://www.simpleavr.com/hvsp/hvsp-fuse-resetter

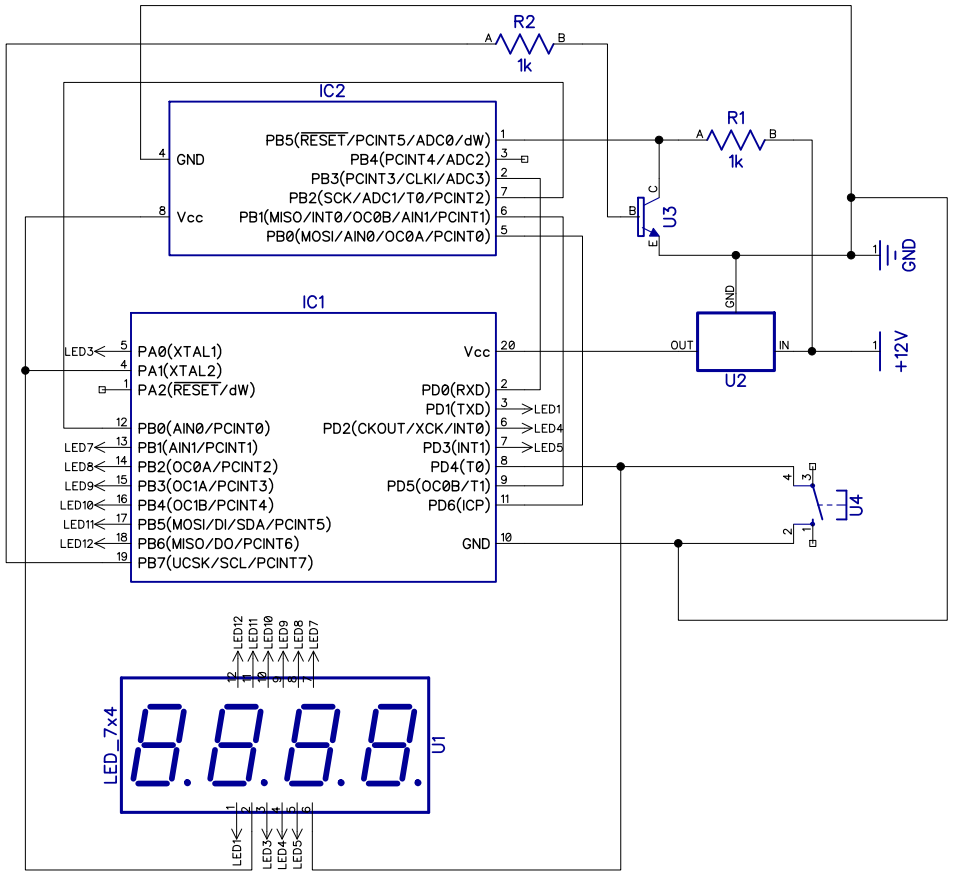

Parts
IC1: ATtiny2313
IC2 Target
R1: 1k
R2: 1k
U1: 7x4 LED Display
U2: 7805
U3 2n2222 or equivalent
U4 Pushbutton